HEAT TREATMENT AND FINAL FINISH

PHYSICAL PROPERTIES	
Y. P.	
T. S.	
EL. 2	
RED	
BR.	
ROCK	
SCL.	

AUGUST 22, 1940

REVISIONS

5	3-16-42
6	7-10-42
7	3-26-43
8	5-20-43
9	4-3-44

DRG. PERTAINS TO

D7052	MT, TRIPOD, M.G
	CAL. .30, M 2

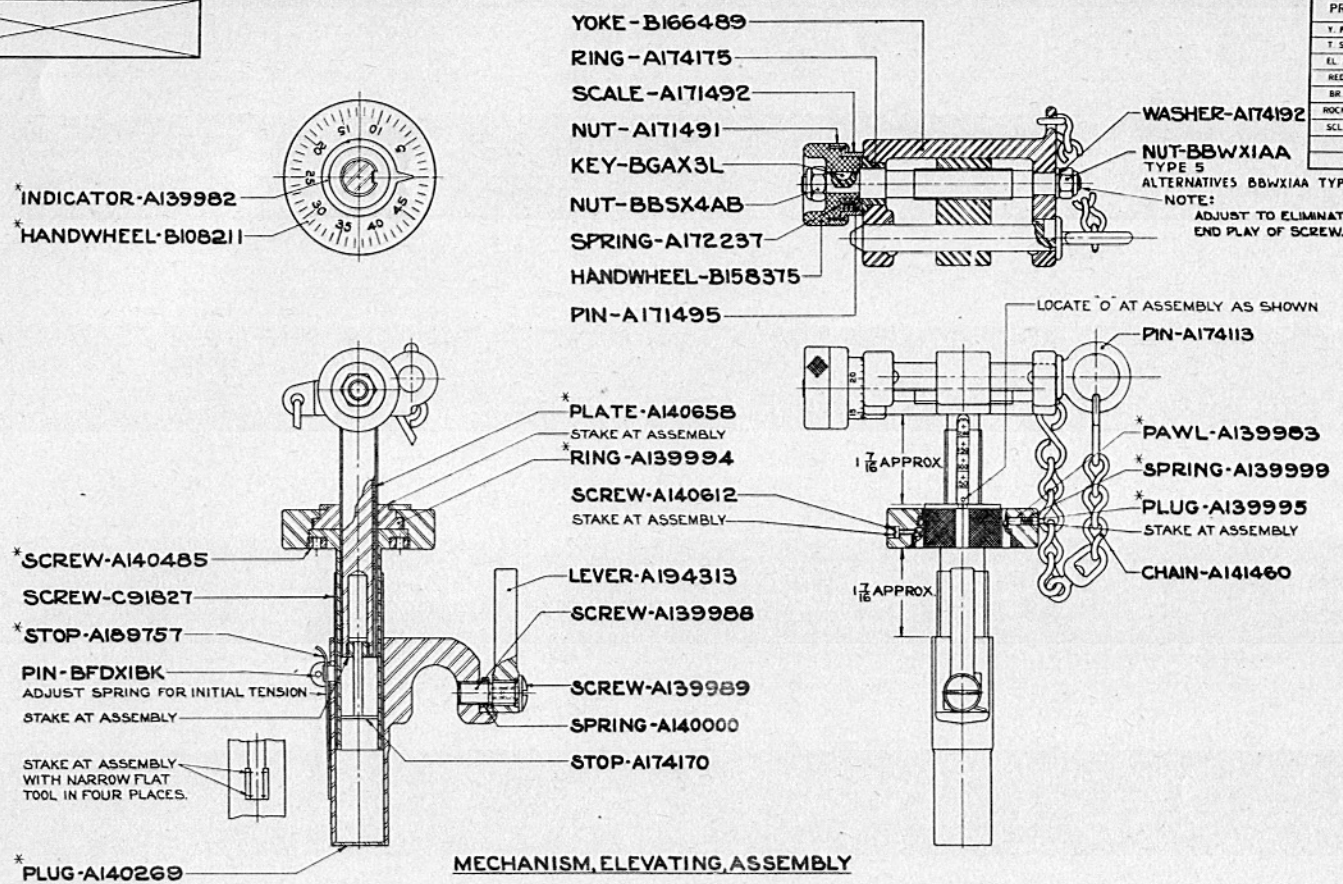

MECHANISM, ELEVATING, ASSEMBLY

*WILL NOT BE ISSUED FOR FIELD MAINTENANCE EXCEPT AS COMPONENTS OF AUTHORIZED ASSEMBLIES.

SUPERSEDES OLD TRACING C74620
UNDER REV. DATE OF MARCH 16, 1942

0 1 2 3 4 5 6 7 8 9 10 11 INCHES

C74620

DRAFTSMAN	TRACER	L.B.G. DRAFTSMAN
RKB	RKB	AHR
CHECKER		CHIEF DRAFTSMAN
L.M.D.		

SUBMITTED:

APPROVED BY ORDER OF THE CHIEF OF ORDNANCE

ORDNANCE DEPT., U. S. A.

MADE AT ROCK ISLAND ARSENAL

A139982

HEAT TREATMENT & FINAL FINISH

FINISH TYPE II - CLASS B

C61056

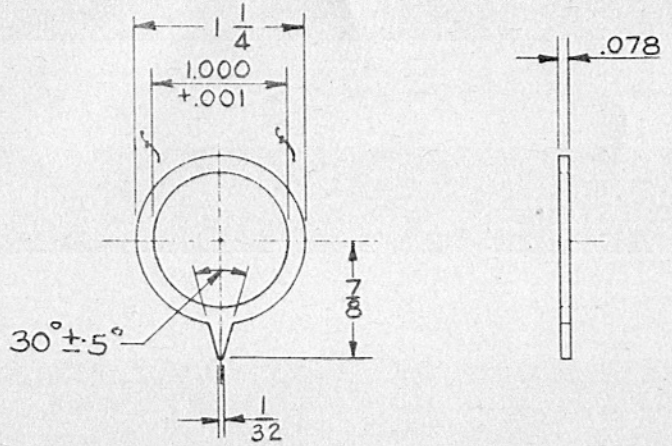

INDICATOR, ELEVATING MECHANISM (A139982)

STEEL WD1010 TO WD1035

TOLERANCE +.00 −.01 ALLOWED ON ALL DIMENSIONS UNLESS OTHERWISE SPECIFIED

MANUFACTURING COMPONENT

SCALE 1/1 | A139982

PHYSICAL PROPERTIES	
Y. P.	
T. S.	
EL-2	
RED.	
HT. T.	
BR.	
SCL.	
C/C.	

JUNE 1, 1934

REVISIONS

1'	2-1-40	6	12-19-42
2'	9-18-40	7*	10-9-44
3'	4-2-41		
4'	9-20-41		
5²	5-1-42		

DRG.	PERTAINS TO
C74620	ELEV. MECH.
C74621	ELEV. MECH.
D7052	MOUNT, TRIPOD, MACH. GUN, CAL. .30, M2
D7135	MOUNT, TRIPOD, MACH. GUN CAL. 50 M3

SYMBOL

IAI 18

DRAFTSMAN	TRACER	L'D'G. DRAFTSMAN

CHECKER		CHIEF DRAFTSMAN
C.A.C.	W.C.H. H.S.H.	

SUBMITTED:

1ST LIEUT., ORD. DEPT., U. S. A.

APPROVED:

MAJOR, ORD. DEPT. U. S. A.

ORD. OFFICE, WAR DEPT.

A139983

HEAT TREATMENT & FINAL FINISH
HEAT TREAT FINISH TYPE III-CLASSA, GRADE 1

C61056	
C91918	MED. TANK M7

PHYSICAL PROPERTIES	
Y. P.	
T. S.	
EL.-2	
RED.	
HT. T	
BR.	
SCL.	
C. C.	
ROCK.C.	45-54

JUNE 1, 1934

REVISIONS

1'	9-18-40	6	12-19-42
2	9-20-41	7	7-12-43
3'	3-25-42	8	10-9-44
4'	5-15-42		
5'	5-22-42		

DRG. PERTAINS TO	
C74620	ELEV. MECH.
C74621	ELEV. MECH.
D7052	MOUNT, TRIPOD, MACH. GUN, CAL..30, M2
D7135	MOUNT, TRIPOD, MACH. GUN CAL..50, M3
C69317	

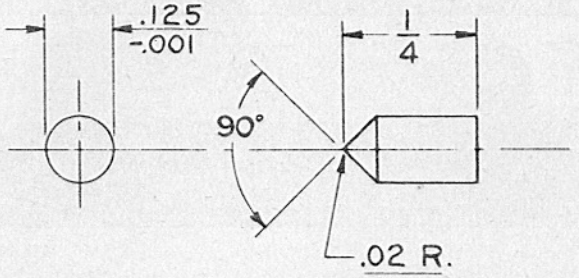

PAWL, INDEXING (A139983)
STEEL WD 1095
FINISH -f-

SYMBOL

OCP 100

DRAFTSMAN	TRACER	L'D'G. DRAFTSMAN
L.E.L.		
CHECKER		CHIEF DRAFTSMAN
C.A.C.	H.B.H.	

SUBMITTED:

1ST LIEUT., ORD. DEPT., U. S. A.

APPROVED:

MAJOR, ORD. DEPT., U. S. A.

ORD. OFFICE, WAR DEPT.

TOLERANCE $^{+.01}_{-.01}$ ALLOWED ON ALL DIMENSIONS UNLESS OTHERWISE SPECIFIED

MANUFACTURING COMPONENT

SCALE 4/1

A139983

A 139988

HEAT TREATMENT & FINAL FINISH

SURFACE HARDEN

FINISH TYPE II-CLASS B

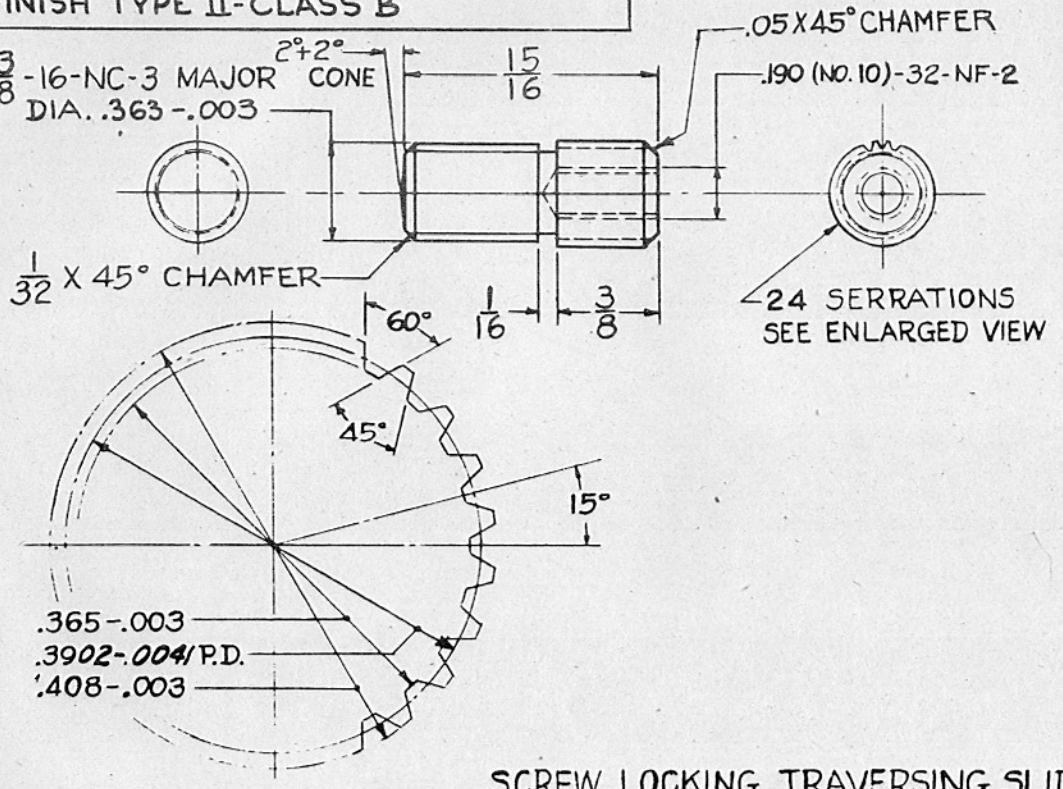

SCREW, LOCKING, TRAVERSING SLIDE (A139988)

STEEL, WDX1314 OR WDX1315

FINISH f

TOLERANCE ±.01/.01 ALLOWED ON ALL DIMENSIONS UNLESS OTHERWISE SPECIFIED

SCALE 2 8/11

A 139988

PHYSICAL PROPERTIES		
Y. P.		
T. S.		
EL.-2		
RED.		
HT. T.		
BR.		
SCL.		
C. C.	.005 DEEP	

JUNE 1, 1934

REVISIONS

1[3]	10-3-38	6'	5-7-42
2[3]	9-18-40	7	12-29-42
3'	4-2-41	8[2]	10-9-44
4'	9-20-41		
5[2]	11-19-41		

DRG. PERTAINS TO

C74620	ELEV. MECH.
D 7052	MOUNT, TRI-
	POD, MACH.
	GUN, CAL. .30, M2

SYMBOL

ABS 493

DRAFTSMAN	TRACER	L'D'G. DRAFTSMAN
H.A		
CHECKER		CHIEF DRAFTSMAN
C.A.C.		

SUBMITTED:

1 ST LIEUT., ORD. DEPT., U. S. A.

APPROVED:

MAJOR, ORD. DEPT., U. S. A.

ORD. OFFICE, WAR DEPT.

HEAT TREATMENT & FINAL FINISH

FINISH TYPE II - CLASS B

C61056

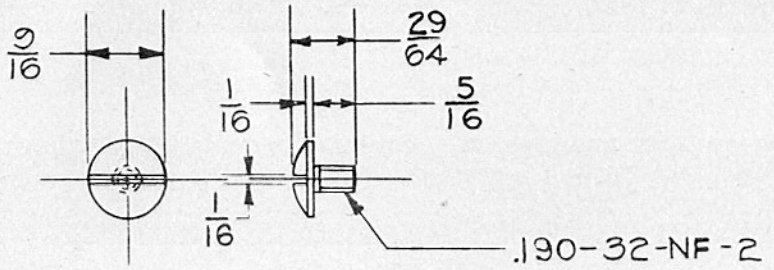

SCREW, TRAVERSING SLIDE LOCK LEVER (A139989-1)

STEEL WD1115

FINISH f

TOLERANCE $^{+.01}_{-.01}$ ALLOWED ON ALL DIMENSIONS UNLESS OTHERWISE SPECIFIED.

SCALE 1/1

A139989

PHYSICAL PROPERTIES	
Y. P.	
T. S.	
EL.-2	
RED.	
HT. T.	
BR.	
SCL.	
C. C.	

JUNE 1, 1934

REVISIONS

1'	5-19-39	6'	4-2-43
2'	4-23-40	7²	10-9-44
3'	9-18-40		
4²	5-7-42		
5	12-19-42		

DRG. PERTAINS TO

C74620	ELEV. MECH.
C74621	ELEV. MECH.
D7052	MOUNT, TRIPOD, MACH. GUN, CAL. .30, M2
D7135	MOUNT, TRIPOD, MACH. GUN CAL. .50, M3

SYMBOL

ABS 494

DRAFTSMAN	TRACER	L'D'G. DRAFTSMAN
F.H.S.		
CHECKER		CHIEF DRAFTSMAN
C.A.C.	H.B.H. O.O. H.B.H.	[illegible]

SUBMITTED:

[signature]

1ST LIEUT., ORD. DEPT., U. S. A.

APPROVED:

MAJOR, ORD. DEPT., U. S. A.

ORD. OFFICE, WAR DEPT.

A 139994

HEAT TREATMENT & FINAL FINISH

HEAT TREATMENT
FINISH TYPE II - CLASS B

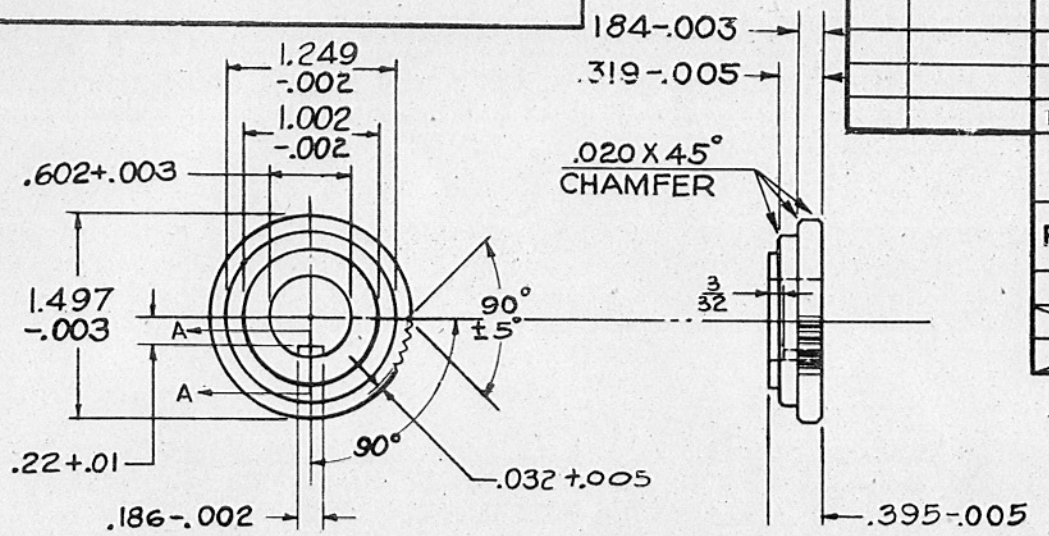

CUT 50 NOTCHES EQUALLY SPACED
CUT FIRST NOTCH 90° FROM KEY

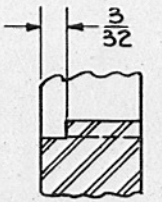

SECTION A-A
SCALE 2/1

RING, CLICK, HANDWHEEL, ELEVATING
STEEL WDX1315
FINISH f

FOR ALTERNATIVE METHOD OF MFR. SEE A139994A MANUFACTURING COMPONENT

TOLERANCE $^{+.01}_{-.01}$ ALLOWED ON ALL DIMENSIONS UNLESS OTHERWISE SPECIFIED.

SCALE 1/1

A139994

11[2]	11-11-4
12[1]	4-19-43
13[2]	10-9-44

PHYSICAL PROPERTIES		
Y. P.		
T S.		
EL.-2		
RED.		
HT. T.		
BR.		
ROCK	A78	
	MIN.	
C. C.	.010 DEEP	

JUNE 1, 1934

REVISIONS

1[3]	5-27-36	6[3]	9-20-41
2[1]	2-15-39	7	12-1-41
3[1]	2-6-40	8[1]	5-7-42
4[1]	9-18-40	9	10-8-42
5[2]	4-2-41	10	10-21-42

DRG. PERTAINS TO	
C74620	ELEV. MECH.
D 7052	MOUNT, TRI-
	POD, MACH.
	GUN, CAL. .30, M2

SYMBOL

SAR 1051

DRAFTSMAN	TRACER	L'D'G. DRAFTSMAN
H.A.		
CHECKER		CHIEF DRAFTSMAN
C.A.C.	H.B.H. R.S.H.	

SUBMITTED:

1 ST LIEUT., ORD. DEPT., U. S. A.

APPROVED:

MAJOR, ORD. DEPT., U. S. A.

ORD. OFFICE, WAR DEPT.

A139995

HEAT TREATMENT & FINAL FINISH

FINISH TYPE II - CLASS B

C61056	
C91918	MED. TANK M7

PHYSICAL PROPERTIES	
Y. P.	
T. S.	
EL.-2	
RED.	
HT. T.	
BR.	
SCL.	
C. C.	

JUNE 1, 1934

REVISIONS

1'	5-19-39	6	12-19-42
2'	12-29-39	7	7-12-43
3'	9-18-40	8	10-9-44
4'	5-15-42		
5'	5-22-42		

DRG. PERTAINS TO

C74620	ELEV. MECH.
C74621	ELEV. MECH.
D7052	MOUNT, TRIPOD,
	MACH. GUN,
	CAL..30, M2
D7135	MT. TRIP. M.G.
	CAL..50, M3
C69317	

SYMBOL

HBP 622

DRAFTSMAN	TRACER	L'D'G. DRAFTSMAN
L. E. S.		
CHECKER		CHIEF DRAFTSMAN
C. A. C.	H. B. H.	

SUBMITTED:

1 ST LIEUT., ORD. DEPT., U. S. A.

APPROVED:

MAJOR, ORD. DEPT., U. S. A.

ORD. OFFICE, WAR DEPT.

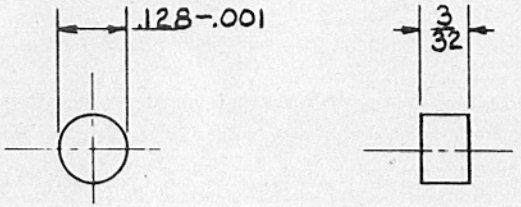

PLUG, HANDWHEEL
STEEL WD 1115
FINISH-f-

A139995-1

TOLERANCE $^{+.01}_{-.01}$ ALLOWED ON ALL DIMENSIONS UNLESS OTHERWISE SPECIFIED

MANUFACTURING COMPONENT

SCALE 4/1

A139995

HEAT TREATMENT & FINAL FINISH	C61056	
FINISH TYPE II - CLASS B	C91918	MED. TANK M7

PHYSICAL PROPERTIES	
Y. P.	
T. S.	
EL-2	
RED.	
HT. T.	
BR.	
SCL.	
C. C.	

JUNE 1, 1934

REVISIONS			
1'	10-19-39	6	7-25-42
2'	11-18-40	7	11-14-42
3'	8-28-41	8	7-12-43
4'	5-15-42	9*	10-9-44
5'	5-22-42		

DRG. PERTAINS TO	
C74620	ELEV. MECH.
C74621	ELEV. MECH.
D7052	MOUNT, TRIPOD
	MACH. GUN,
	CAL. .30, M2
D7135	MT TRIP MG.
	CAL .30, M3
C69317	

SPRING, PAWL, INDEXING (A139999)

SPRING STEEL WIRE WD1085 (SPECIAL) CLASS A

FREE HEIGHT (APPROX.)	.30
OUTSIDE DIA., SOLID, NOT MORE THAN	.123
INSIDE DIA., FREE, NOT LESS THAN	.082
SOLID HEIGHT, NOT MORE THAN	.126
ASSEMBLED HEIGHT	.187
LOAD AT ASSEMBLED HEIGHT	3.25 LBS. +10%
DIA. OF WIRE APPROX.	.018
NUMBER OF COILS	7
ENDS CLOSED AND GROUND FLAT	

MANUFACTURING COMPONENT

A139999

SYMBOL

PAS 632

DRAFTSMAN	TRACER	L'D'G. DRAFTSMAN
L.E.S.		
CHECKER		CHIEF DRAFTSMAN
C.A.C.		

SUBMITTED:

1 ST LIEUT., ORD. DEPT., U. S. A.

APPROVED:

MAJOR, ORD. DEPT., U. S. A.

ORD. OFFICE, WAR DEPT.

A140000

HEAT TREATMENT & FINAL FINISH

FINISH TYPE II - CLASS B

C61056

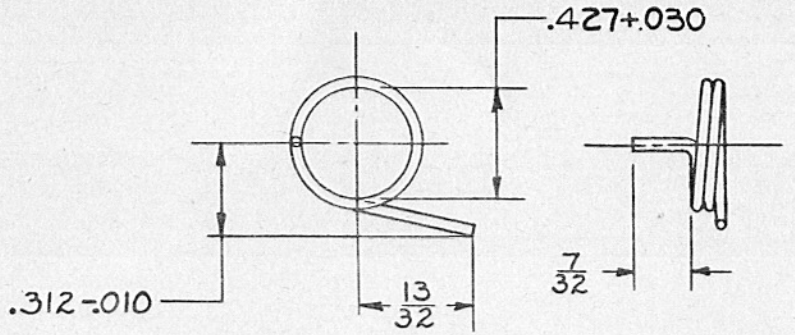

SPRING, TRAVERSING SLIDE LOCK (A140000-6)

SPRING STEEL WIRE WD1085 (SPECIAL) CLASS A
.040 DIA.

TOLERANCE $\pm .01$ ALLOWED ON ALL DIMENSIONS UNLESS OTHERWISE SPECIFIED

SCALE 2/1

A140000

PHYSICAL PROPERTIES	
Y. P.	
T. S.	
EL-2	
RED.	
HT. T.	
BR.	
SCL.	
C. C.	

JUNE 1, 1934

REVISIONS

1'	4-23-40	6²	11-5-41
2'	11-18-40	7²	5-7-42
3'	4-2-41	8'	7-25-42
4'	9-20-41	9'	11-14-42
5'	10-7-41	10²	10-9-44

DRG. PERTAINS TO

CT4620	ELEV. MECH.
CT1621	ELEV. MECH.
D7052	MOUNT, TRIPOD
	MACH. GUN,
	CAL..30, M2
D7135	MT. TRIP. MG
	CAL..50, M3

SYMBOL

PAS633

DRAFTSMAN	TRACER	L'D'G. DRAFTSMAN
E.R.		
CHECKER		CHIEF DRAFTSMAN
C.A.C.		

SUBMITTED:

1 ST LIEUT., ORD. DEPT., U. S. A.

APPROVED:

MAJOR, ORD. DEPT., U. S. A.

ORD. OFFICE. WAR DEPT.

A140269

HEAT TREATMENT & FINAL FINISH

FINISH TYPE III-CLASS A, GRADE 1
AFTER ASS'Y.

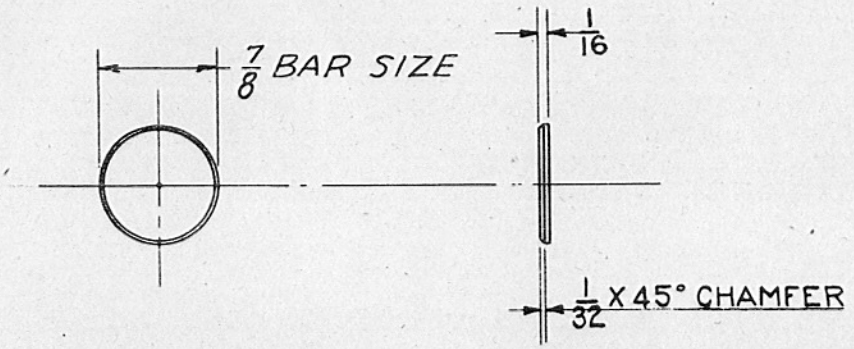

PLUG, SLEEVE, ELEVATING
STEEL WDX1020 COLD ROLLED

TOLERANCE $^{+.005}_{-.005}$ ALLOWED ON ALL DIMENSIONS UNLESS OTHERWISE SPECIFIED

MANUFACTURING COMPONENT
SCALE 1/1 A140269

PHYSICAL PROPERTIES	
Y. P.	
T. S.	
EL-2	
RED.	
HT. T.	
BR.	
SCL.	
C/C.	

JUNE 1, 1934

REVISIONS

1'	9-18-40	6²	10-9-44
2²	4-3-41		
3'	3-16-42		
4'	5-7-42		
5²	12-29-42		

DRG. PERTAINS TO	
C74620	ELEV. MECH.
D 7052	MOUNT, TRIPOD, MACH-GUN, CAL..30, M2

SYMBOL

HBP624

DRAFTSMAN	TRACER	L'D'G. DRAFTSMAN
L.E.S.		
CHECKER		CHIEF DRAFTSMAN
C.A.C.	H.B.H. O.O.H.	

SUBMITTED:

1 ST LIEUT., ORD. DEPT., U. S. A.

APPROVED:

MAJOR, ORD. DEPT., U. S. A.

ORD. OFFICE, WAR DEPT.

A140485

HEAT TREATMENT AND FINAL FINISH

C61056

FINISH TYPE II - CLASS B

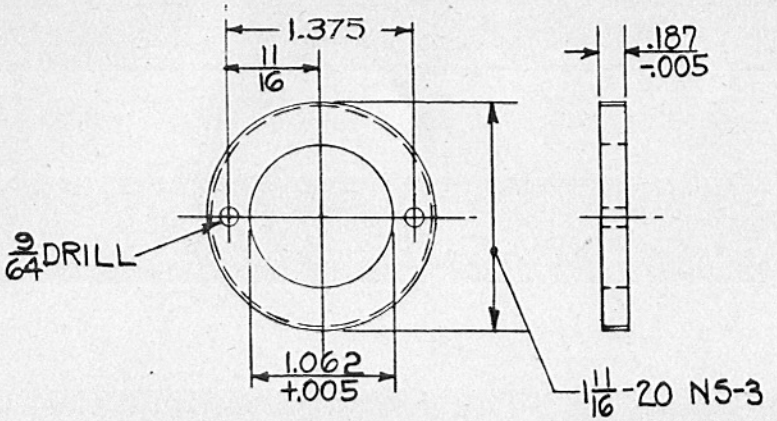

MAJOR DIAM. 1.6875 -.0072
PITCH DIAM. 1.6550 -.0045
MINOR DIAM. 1.6262 MAX.

SCREW, RETAINING

STEEL WDX 1020 AS ROLLED

FINISH f

TOLERANCE $^{+.005}_{-.005}$ ALLOWED ON ALL DIMENSIONS UNLESS OTHERWISE SPECIFIED.

MANUFACTURING COMPONENT

SCALE 1/1

A140485

PHYSICAL PROPERTIES	
Y. P.	
T. S.	
EL.-2	
RED.	
HT. T.	
BR.	
SCL.	
C. C.	

JUNE 1, 1934

REVISIONS

1'	7-14-39	6²	2-27-42
2²	9-18-40	7	4-18-42
3'	4-10-41	8²	5-7-42
4²	5-13-41	9'	12-19-42
5²	9-20-41	10²	10-9-44

DRG. PERTAINS TO

C74620	ELEV. MECH.
C74621	ELEV. MECH.
D7052	MOUNT, TRIPOD, MACH. GUN, CAL. .30, M2
D7135	MOUNT, TRIPOD, MACH GUN CAL. .50, M3

SYMBOL

CBS 305

DRAFTSMAN	TRACER	L'D'G. DRAFTSMAN
HAC.		
CHECKER		CHIEF DRAFTSMAN
C.A.C.	H.B.H.	

SUBMITTED:

1 ST LIEUT., ORD. DEPT., U. S. A.

APPROVED:

MAJOR, ORD. DEPT., U. S. A.

ORD. OFFICE, WAR DEPT.

A140612

HEAT TREATMENT & FINAL FINISH

FINISH TYPE II - CLASS B

1	10-9-44

PHYSICAL PROPERTIES	
Y. P.	
T. S.	
EL-2	
RED.	
HT. T.	
BR.	
SCL.	
C. C.	

JUNE 1, 1934

REVISIONS

1'	5-19-39	6'	5-17-41
2'	4-23-40	7'	5-15-42
3'	9-18-40	8'	5-22-42
4'	2-17-41	9	10-9-42
5'	4-2-41	10	7-12-43

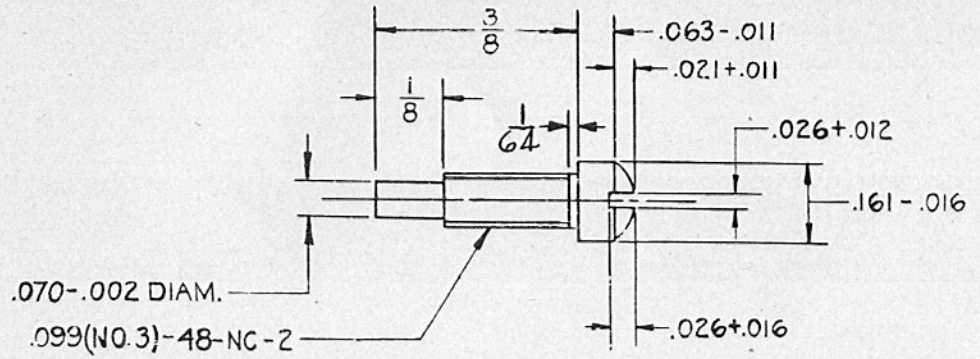

SCREW, LOCK, ELEVATING HANDWHEEL

(A140612-1)

STEEL WD 1115

FINISH f

TOLERANCE $^{+.01}_{-.01}$ ALLOWED ON ALL DIMENSIONS UNLESS OTHERWISE SPECIFIED.

SCALE 4/1

A140612

DRG. PERTAINS TO

C74620	ELEV. MECH
D7052	MOUNT, TRIPOD, MACH. GUN, CAL. .30, M2
C74621	ELEV. MECH.
D7135	MT. TRIP. M.G. CAL. 50, M3
C61056	
C91918	MED. TANK M7

SYMBOL

ABS495

DRAFTSMAN	TRACER	L'D'G. DRAFTSMAN
F.W.S.		
CHECKER		CHIEF DRAFTSMAN
C.A.C.		

SUBMITTED:

1 ST LIEUT., ORD. DEPT., U. S. A.

APPROVED:

MAJOR, ORD. DEPT., U. S. A.

ORD. OFFICE, WAR DEPT.

A140658

HEAT TREATMENT AND FINAL FINISH

FINISH TYPE II-CLASS B

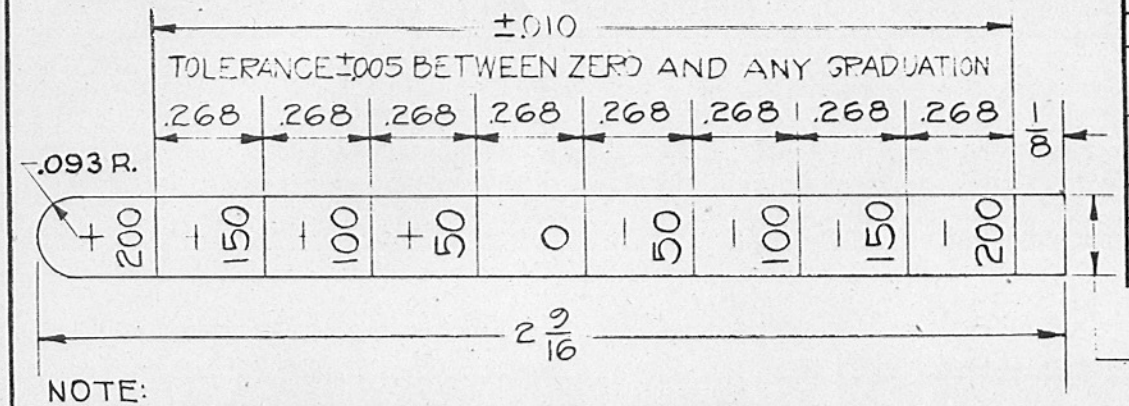

NOTE:
ENGRAVE NUMERALS AS LARGE AS POSSIBLE.
ALL MARKINGS ON PLATE TO BE ENGRAVED AND FILLED WITH WHITE ENAMEL. ALTERNATE: ETCH

PLATE, SCALE, ELEVATING SCREW, UPPER

SHEET STEEL WDO

.0159 (NO. 26 B & S. GAGE)

TOLERANCE $^{+1/64}_{-1/64}$ ALLOWED ON ALL DIMENSIONS UNLESS OTHERWISE SPECIFIED.

MANUFACTURING COMPONENT

SCALE 3/1

A140658

PHYSICAL PROPERTIES	
Y. P.	
T. S.	
EL.-2	
RED.	
HT. T.	
BR.	
SCL.	
C. C.	

JUNE 1, 1934

REVISIONS

1'	7-14-39	6[3]	7-25-42
2[1]	9-18-40	7[2]	12-29-42
3[2]	2-20-41	8'	2-8-43
4'	9-20-41	9[2]	10-9-44
5'	5-7-42		

DRG. PERTAINS TO

C74620	ELEV. MECH.
D7052	MOUNT, TRIPOD, MACH. GUN, CAL. .30, M2

SYMBOL

BAP 4072

DRAFTSMAN	TRACER	L'D'G. DRAFTSMAN
F.H.S.		
CHECKER		CHIEF DRAFTSMAN
C.A.C.	H.B.H.	

SUBMITTED:

1 ST LIEUT., ORD. DEPT., U. S. A.

APPROVED:

MAJOR, ORD. DEPT., U. S. A.

ORD. OFFICE, WAR DEPT.

A141460

HEAT TREATMENT & FINAL FINISH	PHYSICAL PROPERTIES						JAN. 2, 1935
PHOSPHATE BLACK	Y. P.		RED.		SCL.		REVISIONS
	T. S.		BR.				
	EL. 2		ROCK.				

B222619	MED. TANK M7	D41488	MED. TANK M7
B7111392	MT. M.G. M35	D41272B	MED. TANK M7

REVISIONS			
1'	12-1-36	5'	5-3-43
2²	2-5-41	6²	7-12-43
3	7-11-42	7	2-22-44
4'	11-30-42		

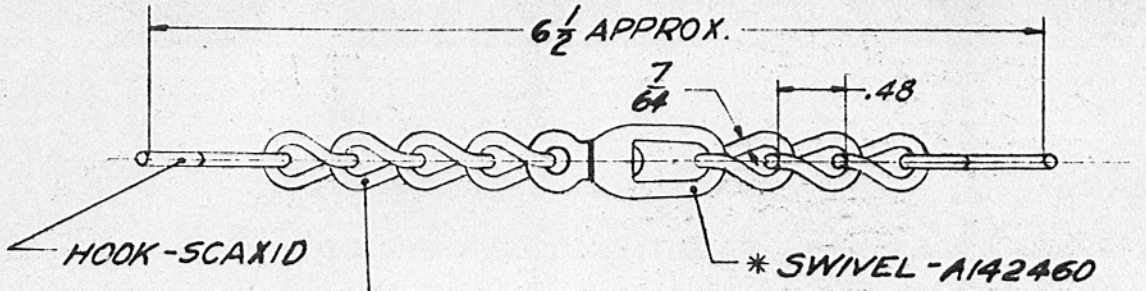

* LINK, CHAIN

AMERICAN CHAIN COMPANY
ELWEL MACHINE CHAIN (TWIST LINK) NO.5 OR EQUAL
MANUFACTURING COMPONENT

A141460A

CHAIN, ASSEMBLY

TOLERANCE ± 1/64 ALLOWED ON ALL DIMENSIONS UNLESS OTHERWISE SPECIFIED

*WILL NOT BE ISSUED FOR FIELD MAINTENANCE EXCEPT AS COMPONENTS OF AUTHORIZED ASSEMBLIES

ALT. CONSTRUCTION: AMERICAN CHAIN & CABLE CO. NO. 3-4 SWIVEL OR EQUAL, WITH 2 LINKS OF CHAIN-SDBXIB & S-HOOK-SCAXID AT EACH END

0 1 2 3 4 5 INCHES

A141460

DRG. PERTAINS TO	
D31559	ELEV. AND TRAV. MECHANISM
D7371	TRIPOD MOUNT, M1917A1
C74620	MECH. ELEV. ASSY.
C59827	
C74621	MECH. ELEV. ASSY.
D7052	MT., TRIPOD, MACH. GUN, CAL. .30, M2
D7135	MT., TRIPOD MACH. GUN, CAL. .0, M[illegible]

SYMBOL

VZC177

DRAFTSMAN	TRACER	L'D'G DRAFTSMAN
C.S.R.		
CHECKER		CHIEF DRAFTSMAN
[signature]	[signature]	[signature]

SUBMITTED:-
[signature]
CAPT., ORD. DEPT., U. S. A.

APPROVED BY ORDER OF THE CHIEF OF ORDNANCE:
[signature]
LT. COL., ORD. DEPT., U. S. A.

ORDNANCE DEPT., U. S. A.

A171491

HEAT TREATMENT & FINAL FINISH	PHYSICAL PROPERTIES					
PHOSPHATE BLACK	Y. P.	30000	RED.		SCL.	
	T. S.	55000	BR.			
	EL. 2	25%	ROCK.			

SEPT. 18, 1940

REVISIONS

1'	2-20-41	5	4-1-42
2'	4-10-41	6[2]	6-4-42
3[2]	9-20-41	7[1]	7-11-42
4[2]	2-12-42	8[2]	7-25-42
9	12-29-42		
10'	4-2-43		

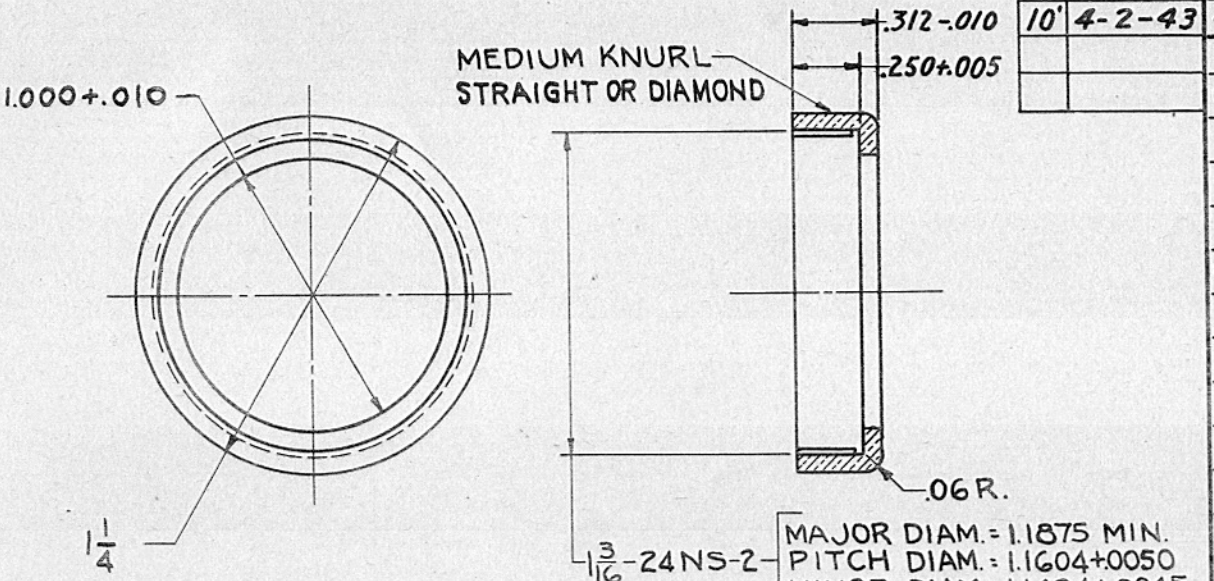

A171491-3

NUT, LOCKING, TRAV. SCALE

STEEL WDX1315

NOTE: FINISH "f"
WD 1010 PRESSED STEEL 16 (.0598 U.S. GAGE) PERMITTED AS AN ALTERNATIVE METHOD OF MANUFACTURE.

SCALE 2/1

TOLERANCE ON DIMENSIONS NOT OTHERWISE SPECIFIED
DECIMAL ± .005
FRACTIONAL ± 1/64
ANGULAR ± ——

A171491

DRG. PERTAINS TO

C74620	MECH. ELEVATING, ASSEMBLY.
D7052	MT., TRIPOD, M.G., CAL. .30, M2.
C74621	MECH. ELEVATING, ASSEMBLY
D7135	MT., TRIPOD, M.G., CAL. .50, M3.

DRAFTSMAN	TRACER	L'D'G. DRAFTSMAN
W.L.C.		
CHECKER	O.O.	CHIEF DRAFTSMAN

SUBMITTED:- Date
K. H. Coombs
CAPT. ORD. DEPT., U. S. A.

APPROVED BY ORDER OF THE CHIEF OF ORDNANCE:
CAPT. ORD. DEPT., U. S. A.

ORDNANCE DEPT., U. S. A.

MADE AT ROCK ISLAND ARSENAL

A171492

HEAT TREATMENT & FINAL FINISH	PHYSICAL PROPERTIES						SEPT. 18, 1940
PHOSPHATE BLACK	Y. P.	30000	RED.		SCL.		REVISIONS
	T. S.	55000	BR.				
	EL. 2	25%	ROCK.				

9[1]	7-11-42		
10[2]	7-25-42		
11[2]	10-8-42		

REVISIONS			
1[2]	2-20-41	5	7-29-41
2	3-21-41	6[2]	9-20-41
3	4-9-41	7[2]	2-12-42
4	6-4-41	8[2]	6-4-42

NOTE:
WD 1010 PRESSED STEEL AND $\frac{3}{32}$ R. PERMITTED AS AN ALTERNATIVE METHOD OF MANUFACTURE.

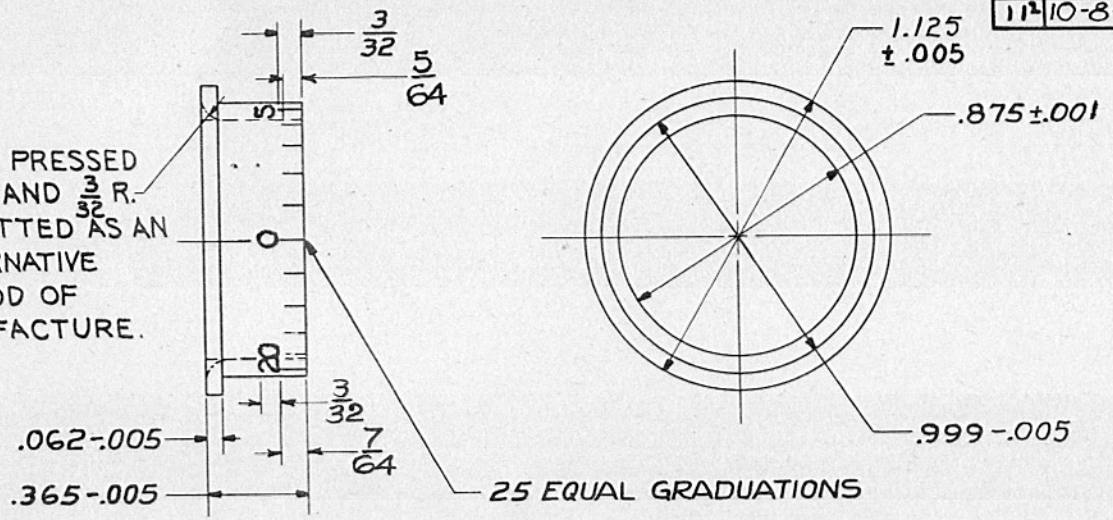

NOTE:
MARKINGS TO BE ENGRAVED .015 WIDE AND .010 TO .015 DEEP AND FILLED WITH WHITE ENAMEL

SCALE, TRAV. MECHANISM (A171492)
STEEL WDX1315
FINISH f

TOLERANCE ON DIMENSIONS NOT OTHERWISE SPECIFIED
DECIMAL ± —
FRACTIONAL ± $\frac{1}{64}$
ANGULAR ± —

SCALE $\frac{2}{1}$

A171492

DRG. PERTAINS TO	
C74620	MECH. ELEVATING, ASSEMBLY.
D7052	MOUNT, TRIPOD MACHINE GUN CAL..30, M2
C74621	MECH. ELEVATING, ASSEMBLY.
D7135	MOUNT, TRIPOD MACHINE GUN CAL..50, M3

DRAFTSMAN	TRACER	L'D'G. DRAFTSMAN
	A. ROSE	
CHECKER		CHIEF DRAFTSMAN

SUBMITTED:-
CAPT. ORD. DEPT., U. S. A.

APPROVED BY ORDER OF THE CHIEF OF ORDNANCE:
CAPT. ORD. DEPT., U. S. A.

ORDNANCE DEPT., U. S. A.

MADE AT ROCK ISLAND ARSENAL

A171495

HEAT TREATMENT & FINAL FINISH	PHYSICAL PROPERTIES						SEPT. 18, 1940
HEAT TREAT (PERLITONIZE)	Y. P.		RED.		SCL.	—	REVISIONS
OXIDE BLACK	T. S.		BR.		C.C.	.01 DEEP	1' 2-20-41
	EL. 2		ROCK.				2' 9-20-41
							3 7-11-42
							4 12-29-42

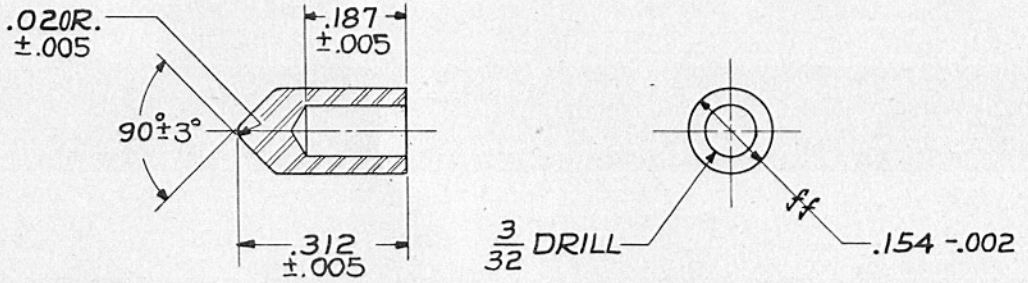

PIN, CLICK, ELEV. & TRAV. MECHANISM (A171495)

STEEL WDX1315

FINISH f

DRG. PERTAINS TO	
C74620	MECH. ELEVATING, ASSEMBLY.
D7052	MOUNT, TRIPOD MACHINE GUN CAL..30, M2
C74621	MECH. ELEVATING, ASSEMBLY.
D7135	MOUNT, TRIPOD MACHINE GUN CAL..50, M3

DRAFTSMAN	TRACER	L'D'G. DRAFTSMAN
V.L.C.	A. ROSE	
CHECKER	O.D.	CHIEF DRAFTSMAN
[signature]		[signature]

SUBMITTED:- [signature] R. H. Coombs CAPT. ORD. DEPT., U. S. A.

APPROVED BY ORDER OF THE CHIEF OF ORDNANCE: [signature] CAPT., ORD. DEPT., U. S. A.

TOLERANCE ON DIMENSIONS NOT OTHERWISE SPECIFIED
DECIMAL
FRACTIONAL
ANGULAR

SCALE 4/1 A171495

ORDNANCE DEPT., U. S. A.

MADE AT ROCK ISLAND ARSEN'

A172237

HEAT TREATMENT AND FINAL FINISH

PHOSPHATE BLACK

SPRING, PIN, CLICK (A172237)

SPRING STEEL WIRE WD1085 (SPECIAL) CLASS A

OUTSIDE DIAM. SOLID, NOT MORE THAN	.088
INSIDE DIAM. FREE, NOT LESS THAN	.047
ASSEMBLED HEIGHT	.250
LOAD AT ASSEMBLED HEIGHT	1.76
SOLID HEIGHT, NOT MORE THAN	.216
DIAM. OF WIRE (APPROX.)	.018
FREE HEIGHT (APPROX.)	.296
NUMBER OF COILS (APPROX.)	12.

ENDS CLOSED AND GROUND FLAT.

PHYSICAL PROPERTIES	
Y.P.	
T.S.	
EL.-2	
RED.	
HT.T.	
BR.	
SCL.	
C.C.	

SEPT. 18, 1940

REVISIONS

1'	2-18-41		
2	7-11-42		
3'	7-25-42		
4'	11-14-42		

DRG. PERTAINS TO

C74620	MECH. ELEV., ASS'Y.
D7052	MT., TRIPOD MACH. GUN CAL. .30, M2
C74621	MECH. ELEV. ASSEMBLY
D7135	MT., TRIPOD MACH. GUN CAL. .50, M3

SYMBOL

DFTSMAN	TRACER	LDG DFTSMAN
J. G. N.	A. ROSE	
CHECKER	CHECKER	CHIEF DFTSMAN
Hug.		

SUBMITTED:- Das
R. H. Coombs
CAPT. ORD. DEPT. U.S.A.

APPROVED:-
M L DeGuire
CAPT., ORD. DEPT. U.S.A.

A172237

ORD. OFFICE, WAR DEPT.

A174113

HEAT TREATMENT & FINAL FINISH	PHYSICAL PROPERTIES					
OXIDE BLACK BEFORE ASSEMBLING BALLS.	Y. P.		RED.		SCL.	
	T. S.		BR.			
	EL. 2		ROCK.			

SEPT. 18, 1940

REVISIONS

1	2-19-41	5	4-19-43
2	5-12-42		
3	7-11-42		
4	10-8-42		

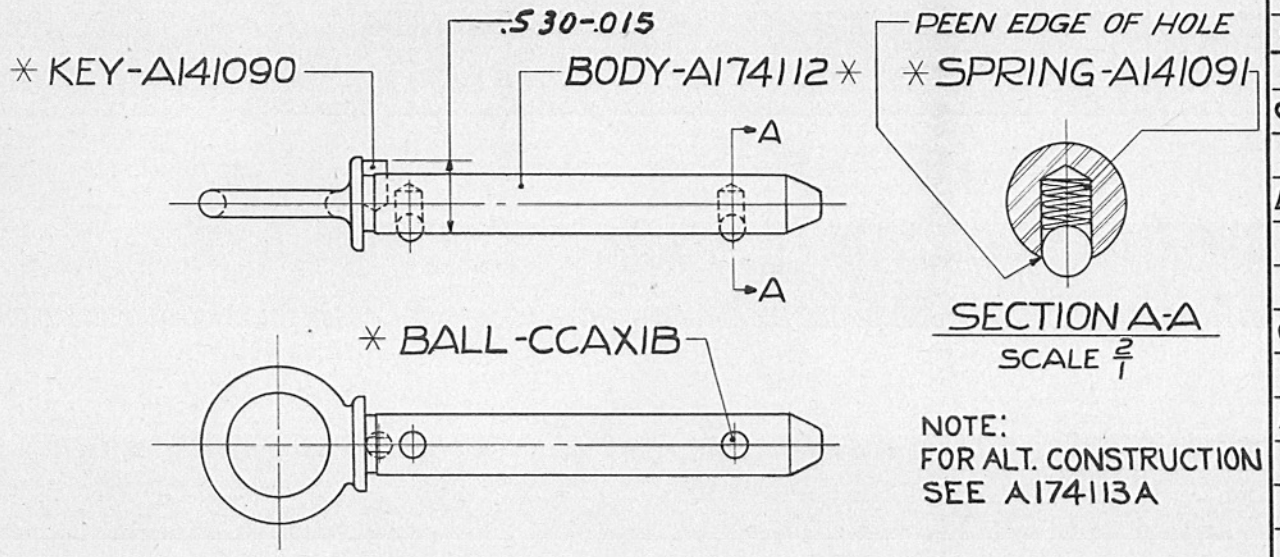

SECTION A-A
SCALE 2/1

NOTE:
FOR ALT. CONSTRUCTION
SEE A174113A

DRG. PERTAINS TO

C74620	MECH. ELEVATING, ASSEMBLY
D 7052	MOUNT, TRIPOD, MACHINE GUN CAL..30, M2
C74621	MECH. ELEVATING, ASSEMBLY
D 7135	MOUNT, TRIPOD, MACHINE GUN CAL..50, M3

PIN, ELEVATING SCREW, ASSEMBLY (A174113

✳ WILL NOT BE ISSUED FOR FIELD MAINTENANCE EXCEPT AS COMPONENTS OF AUTHORIZED ASSEMBLIES.

SUPERSEDES OLD TRACINGS B109198 AND A142409 UNDER DATE OF SEPT. 18, 1940.

DRAFTSMAN	TRACER	L'D'G. DRAFTSMAN
A. ROSE	A. ROSE	
CHECKER	O.D.	CHIEF DRAFTSMAN

SUBMITTED:-
R. H. Coombs
CAPT. ORD. DEPT., U. S. A.

APPROVED BY ORDER OF THE CHIEF OF ORDNANCE:
M. R. DeGuire
CAPT. ORD. DEPT., U. S. A.

TOLERANCE ON DIMENSIONS NOT OTHERWISE SPECIFIED
DECIMAL ±–
FRACTIONAL ±–
ANGULAR ±–

0 1 2 3 IN.

A174113

ORDNANCE DEPT., U. S. A.

MADE AT ROCK ISLAND ARSENAL

A174175

HEAT TREATMENT & FINAL FINISH	PHYSICAL PROPERTIES						SEPT. 18, 1940
HEAT TREAT OXIDE BLACK	Y. P.		RED.		SCL.		REVISIONS
	T. S.		BR.		C.C.	.01 DEEP	
	EL. 2		ROCK.				

1'	4-10-41	5	7-25-42
2'	6-17-41	6²	10-8-42
3²	9-20-41	7²	11-11-42
4	7-11-42	8'	12-28-42
9'	4-19-43		

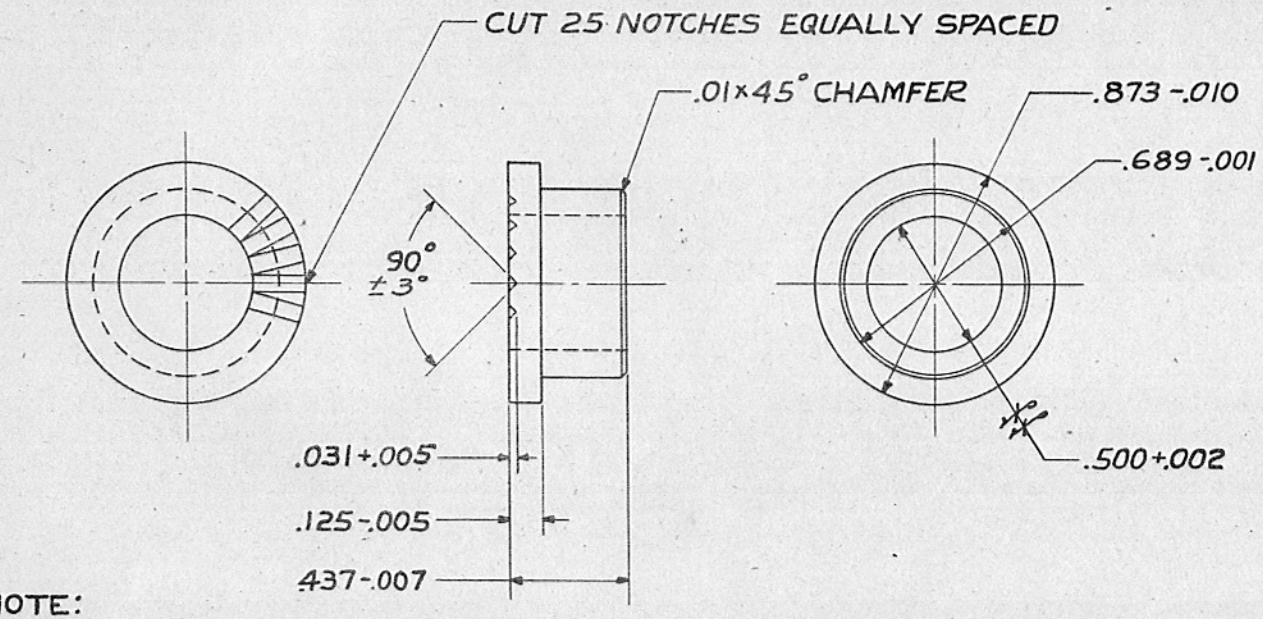

NOTE:
TEETH MAY
BE FORMED
BY COINING

RING, CLICK, TRAV. MECHANISM
STEEL WDX1020
FINISH "f"

A174175

TOLERANCE ON DIMENSIONS
NOT OTHERWISE SPECIFIED
DECIMAL ±—
FRACTIONAL ±—
ANGULAR ±1°

SCALE 2/1

A174175

DRG. PERTAINS TO	
C74620	MECH., ELEV.,
	ASSY.
D7052	MT., TRIPOD,
	MACH. GUN,
	CAL..30, M2

DRAFTSMAN	TRACER	L'D'G. DRAFTSMAN
A. ROSE	A. ROSE	
CHECKER	O.O.	CHIEF DRAFTSMAN
Hug.		

SUBMITTED:- Dat
R. H. Coombs
CAPT. ORD. DEPT., U. S. A.

APPROVED BY ORDER OF THE CHIEF OF ORDNANCE:
M L DeGuire
CAPT. ORD. DEPT., U. S. A.

ORDNANCE DEPT., U. S. A.

MADE AT ROCK ISLAND ARSENAL

A174192

HEAT TREATMENT & FINISH	PHYSICAL PROPERTIES						SEPT. 18, 1940			
HEAT TREAT PHOSPHATE BLACK	Y. P.		RED.		SCL.		REVISIONS			
	T. S.		BR.		C.C.	.010-.020	1'	2-18-41	5²	10-8-42
	EL. 2		ROCK.			DEEP	2'	4-10-41		
							3²	9-20-41		
							4	7-11-42		

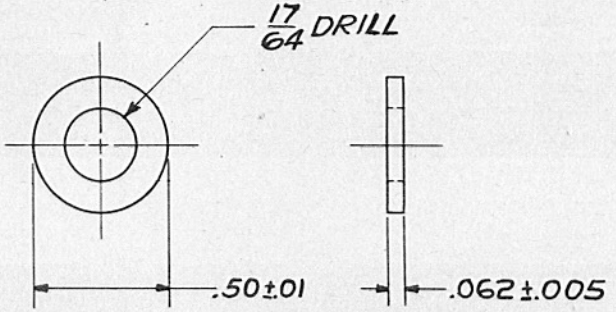

WASHER
STEEL WDX1020
FINISH f

(A174192)

TOLERANCE ON DIMENSIONS
NOT OTHERWISE SPECIFIED
DECIMAL ± —
FRACTIONAL ± 1/64
ANGULAR ± —

SCALE 2/1

A174192

DRG. PERTAINS TO

C74620	MECH. ELEVATING,
	ASSEMBLY.
D7052	MOUNT, TRIPOD
	MACHINE GUN
	CAL..30, M2
C74621	MECH. ELEVATING,
	ASSEMBLY.
D7135	MOUNT, TRIPOD
	MACHINE GUN
	CAL..50, M3

DRAFTSMAN	TRACER	L'D'G. DRAFTSMAN
E. DE C.	A. ROSE	
CHECKER	O.O.	CHIEF DRAFTSMAN

SUBMITTED:- Date
R. H. Loomis
CAPT. ORD. DEPT., U. S. A.

APPROVED BY ORDER OF THE CHIEF OF ORDNANCE:
M. L. DeGuire
CAPT. ORD. DEPT., U. S. A.

ORDNANCE DEPT., U. S. A.

MADE AT ROCK ISLAND ARSENAL

A189757

HEAT TREATMENT & FINAL FINISH	PHYSICAL PROPERTIES					
PHOSPHATE BLACK	Y. P.		RED.		SCL.	
	T. S.		BR.			
	EL. 2		ROCK.			

DECEMBER 19, 1940

REVISIONS

1	12-29-42			

DRG. PERTAINS TO

C74620	MECHANISM,
	ELEVATING,
	ASSEMBLY
D7052	MT., TRIPOD,
	MACH. GUN,
	CAL. 30, M2

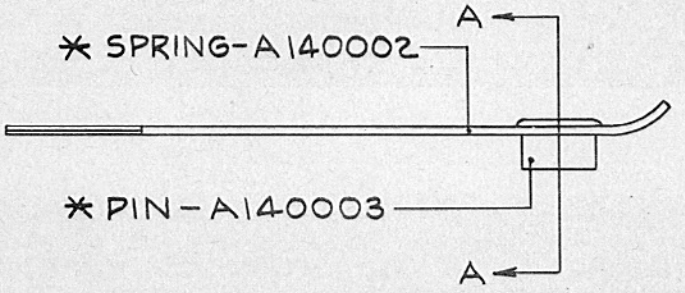

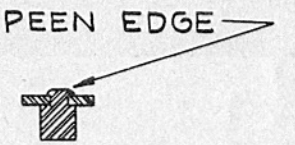

SECTION A-A

STOP, ELEVATING SCREW, ASSEMBLY (A189757)

* WILL NOT BE ISSUED FOR FIELD MAINTENANCE EXCEPT AS COMPONENTS OF AUTHORIZED ASSEMBLIES.

DRAFTSMAN	TRACER	L'D'G. DRAFTSMAN
A.A.B.	A.A.B.	
CHECKER	O.K.	CHIEF DRAFTSMAN
H.F.B.		

SUBMITTED:-
Geo. L. Kuhn
1ST LT. ORD. DEPT., U. S. A.

APPROVED BY ORDER OF THE CHIEF OF ORDNANCE:
W Moore
MAJ. ORD. DEPT., U. S. A.

ORDNANCE DEPT., U. S. A.

TOLERANCE ON DIMENSIONS NOT OTHERWISE SPECIFIED
DECIMAL ± —
FRACTIONAL ± —
ANGULAR ± —

0 1 IN.

A189757

MADE AT ROCK ISLAND ARSENAL

A194313

HEAT TREATMENT & FINAL FINISH	PHYSICAL PROPERTIES					
FINISH TYPE II - CLASS B.	Y. P.		RED.		SCL.	
	T. S.		BR.			
	EL. 2		ROCK.			

JULY 1, 1942

REVISIONS

1	12-19-42			
2	10-9-44			

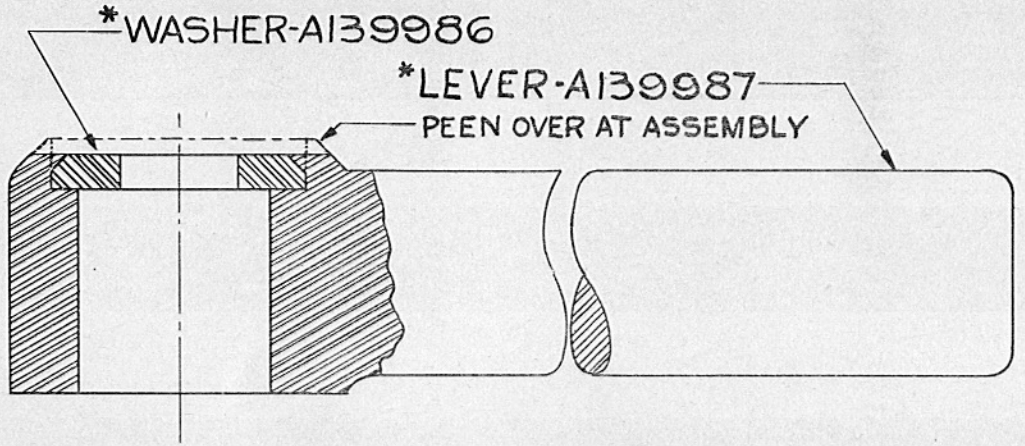

DRG. PERTAINS TO

C74620	ELEV. MECH.
C74621	ELEV. MECH.
D7052	MT. TRIPOD,
	CAL..30, M2
D7135	MT. TRIPOD
	CAL..50, M3
C61056	

LEVER, TRAVERSING SLIDE LOCK, ASSEMBLY

DRAFTSMAN	TRACER	L'D'G. DRAFTSMAN
J.E.C.		
CHECKER	O.O.	CHIEF DRAFTSMAN
A.F.		

SUBMITTED:-
A. H. Roe

*WILL NOT BE ISSUED FOR FIELD MAINTENANCE EXCEPT AS COMPONENTS OF AUTHORIZED ASSEMBLIES

TOLERANCE ON DIMENSIONS
NOT OTHERWISE SPECIFIED
DECIMAL ± —
FRACTIONAL ± —
ANGULAR ± —

APPROVED BY ORDER OF THE CHIEF OF ORDNANCE:
Geo. L. Russell
CAPT. ORD. DEPT., U. S. A.

SCALE 4/1

A194313

ORDNANCE DEPT., U. S. A.

MADE AT ROCK ISLAND ARSENAL

HEAT TREATMENT AND FINAL FINISH

FINISH TYPE II - CLASS B

NOTE:
LINES AND GRADUATIONS
.010 ±.005 WIDE X .010 ±.005 DEEP.

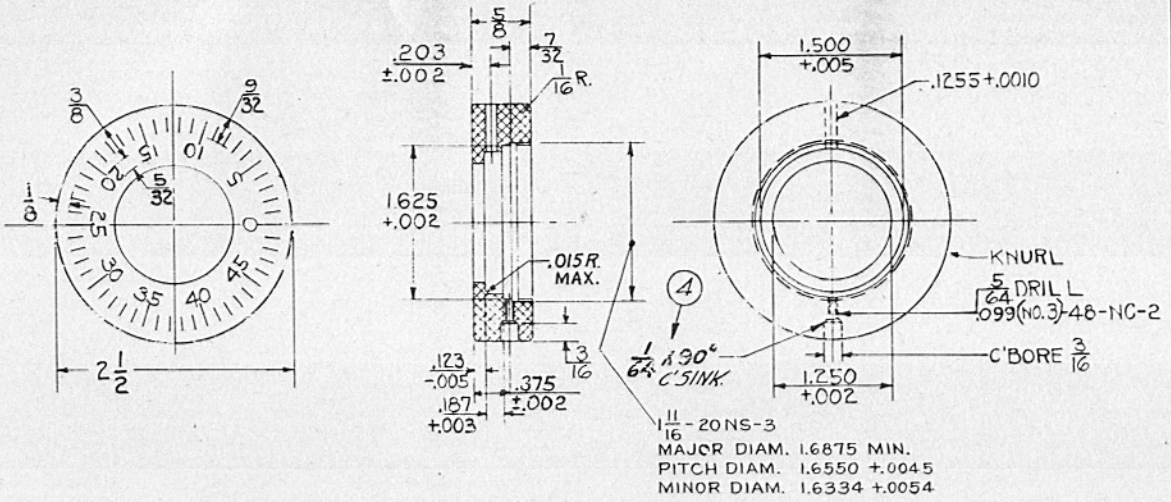

NOTE: EACH NOTCH EQUALS 5 MILS, 50 GRADUATIONS IN ALL, EQUALLY SPACED. FILL WITH WHITE ENAMEL OR EQUAL

HANDWHEEL, ELEVATING (B108211)

STEEL WDX1020 AS ROLLED
FINISH f
MANUFACTURING COMPONENT

TOLERANCE ±.005 ±.005 ALLOWED ON ALL DIMENSIONS UNLESS OTHERWISE SPECIFIED.

SEE ALTERNATIVE CONSTRUCTION SEE B108211A THRU C

SCALE 1/1

B108211

PHYSICAL PROPERTIES	
Y. P.	
T. S.	
EL.-2	
RED.	
HT. T.	
BR.	
SCL.	
C. C.	

JUNE 1, 1934

REVISIONS

1'	7-18-39	14	11-11-42
2'	2-6-40	15'	4-19-43
3[2]	10-1-40	16	10-9-44
4[3]	4-10-41		
5[2]	5-13-41		
6'	9-20-41		
7[2]	2-27-42		
8[2]	4-18-42		
9'	4-28-42		
10'	5-21-42		
11[3]	7-10-42		
12	7-25-42		
13'	10-8-42		

DRG. PERTAINS TO

C74620	ELEV. MECH.
C74621	ELEV. MECH.
D7135	MOUNT, TRIPOD, MACH. GUN, CAL .50, M2
D7052	MOUNT, TRIPOD, MACH. GUN, CAL .30, M2
C61056	

SYMBOL

NDH98

DRAFTSMAN	TRACER	L'DG. DRAFTSMAN
Mac.		
CHECKER		CHIEF DRAFTSMAN
C.A.C.		

SUBMITTED:

1ST LIEUT., ORD. DEPT. U.S.A.

APPROVED:

MAJOR, ORD. DEPT. U.S.A.

ORD. OFFICE, WAR DEPT

HEAT TREATMENT AND FINAL FINISH

PHOSPHATE BLACK.

PHYSICAL PROPERTIES	
Y. P.	
T. S.	
EL. 2	
RED	
BR.	
ROCK.	
SCL.	

SEPT. 18, 1940

REVISIONS

1'	2-20-41	9'	5-20-43
2²	4-3-41	10	7-3-44
3²	5-13-41		
4²	9-20-41		
5'	10-7-41		
6²	2-27-42		
7	7-11-42		
8²	10-8-42		

DRG. PERTAINS TO

C74620	MECH. ELEVATING, ASSEMBLY.
D7052	MT., TRIPOD, M.G., CAL. .30, M2.
C74621	MECH. ELEVATING, ASSEMBLY.
D7135	MT., TRIPOD, M.G., CAL. .50, M3.

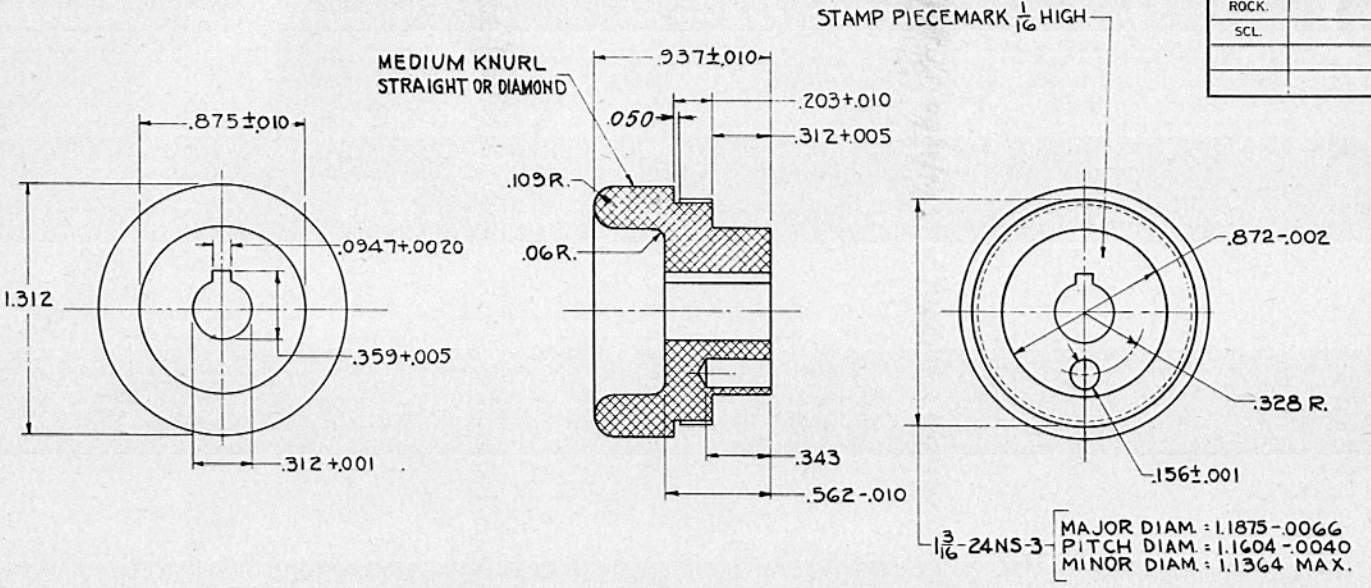

HANDWHEEL, TRAVERSING (B158375)

STEEL WD X 1020 AS ROLLED

FINISH "f"

TOLERANCE ON DIMENSIONS NOT OTHERWISE SPECIFIED
DECIMAL ± .005
FRACTIONAL ± ——
ANGULAR ± ——

SCALE 2/1

B158375

DRAFTSMAN V.L.C. | TRACER Hug. | L'D'G. DRAFTSMAN | CHECKER Hug. | CHIEF DRAFTSMAN

SUBMITTED:- Dat
Caombs
CAPT. ORD. DEPT. U.S.A.

APPROVED BY ORDER OF THE CHIEF OF ORDNANCE:
M L De Guire
CAPT. ORD. DEPT. U.S.A.

ORDNANCE DEPT., U. S. A.

MADE AT ROCK ISLAND ARSENAL

HEAT TREATMENT AND FINAL FINISH

HEAT TREAT
OXIDE BLACK

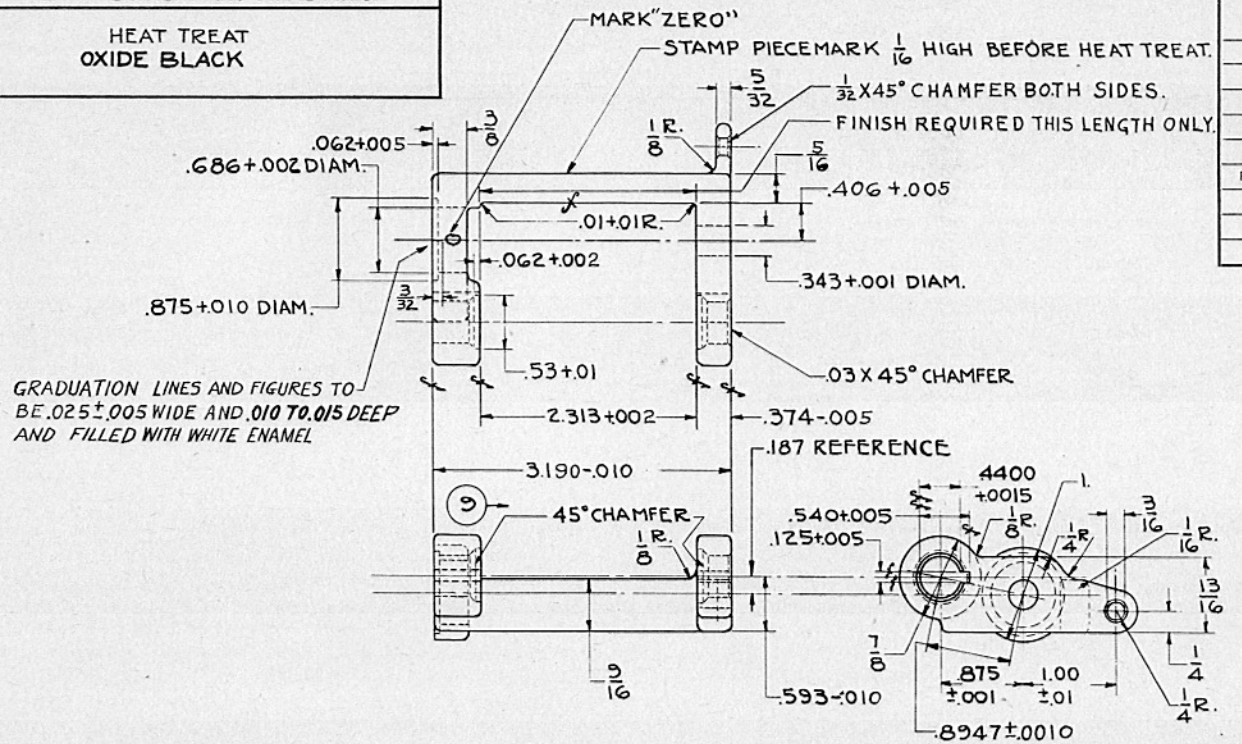

YOKE, ELEVATING SCREW, UPPER (B166489)
STEEL WDX1335

ROUND ALL CORNERS TO 1/16 RADIUS UNLESS OTHERWISE SPECIFIED.

NOTE:
FOR ALT. CONSTRUCTION SEE B166489 A

TOLERANCE ON DIMENSIONS NOT OTHERWISE SPECIFIED
DECIMAL ± —
FRACTIONAL ± 1/64
ANGULAR ± 1°

SCALE 1/1

B166489

PHYSICAL PROPERTIES	
Y. P.	
T. S.	
EL. 2	
RED	
BR.	
ROCK. C.	25-30
SCL.	

SEPT. 18, 1940

REVISIONS

1	3-21-41	9³	4-19-43
2²	3-27-41		
3³	9-20-41		
4²	10-7-41		
5¹	5-21-42		
6	7-11-42		
7¹	10-8-42		
8¹	1-23-43		

DRG. PERTAINS TO

C74620	MECH. ELEVATING, ASSEMBLY.
D 7052	MT., TRIPOD, M.G., CAL. .30, M2.

DRAFTSMAN: E. McC
TRACER: Dilg
L.D.S. DRAFTSMAN:
CHECKED: Dilg
CHIEF DRAFTSMAN: WRD

SUBMITTED: Wm. H. Cummins
CAPT. ORD. DEPT. U. S. A.

APPROVED BY ORDER OF THE CHIEF OF ORDNANCE.
M. Eberle Guile
CAPT. ORD. DEPT. U. S. A.

ORDNANCE DEPT., U. S. A.
MADE AT ROCK ISLAND ARSENAL

SUPERSEDES OLD TRACING BBWX1 UNDER REVISION DATE OF 12-16-44

NUT, SAFETY, NF-3

BBWX1

ORDNANCE STANDARD (COMMERCIAL)

HSH APPROVED 11-26-41 DATE

TYPES SHOWN ARE FOR GENERAL USE. THEY SHALL NOT BE USED AS SUBSTITUTES FOR TYPES SHOWN ON DRAWING BBSX4 EITHER FOR INITIAL INSTALLATION OR FIELD REQUISITIONS.

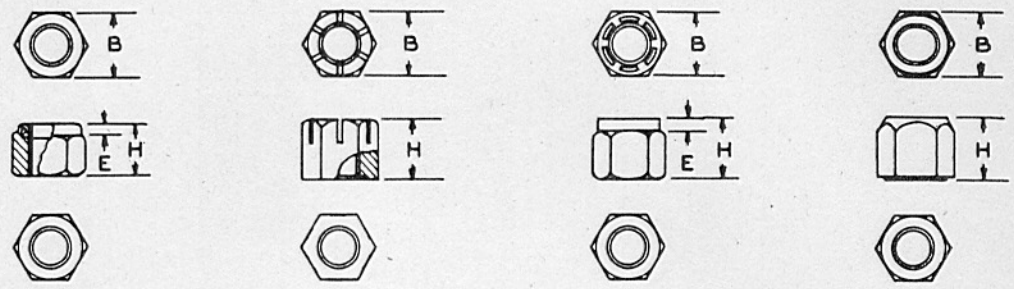

BOOTS MARSDEN STANDCO STOVER

NOMINAL DIAMETER	1/4	5/16	3/8	7/16	1/2
THREADS PER INCH	28	24	24	20	20
B WIDTH ACROSS FLATS	7/16	1/2	9/16	5/8	3/4
H OVERALL HEIGHT	5/16	11/32	29/64	29/64	19/32
E COLLAR HEIGHT MAX.	9/64	5/32	11/64	3/16	7/32
MATERIAL AND FINISH	ORDNANCE PART NUMBER				
STEEL					
PLAIN FINISH	503376	503379	503382	503385	503388
CADMIUM OR ZINC PLATED	503377	503380	503383	503386	503389
PHOSPHATE COATED					
BRASS					
ALUMINUM ALLOY					

NOMINAL DIAMETER	9/16	5/8	3/4	7/8	1
THREADS PER INCH	18	18	16	14	14
B WIDTH ACROSS FLATS	7/8	15/16	1-1/16	1-1/4	1-7/16
H OVERALL HEIGHT	11/16	3/4	7/8	1	1-1/8
E COLLAR HEIGHT MAX.	1/4	9/32	5/16	11/32	13/32
MATERIAL AND FINISH	ORDNANCE PART NUMBER				
STEEL					
PLAIN FINISH	503391	503394	503397	503400	503403
CADMIUM OR ZINC PLATED	503392	503395	503398	503401	503404
PHOSPHATE COATED					
BRASS					
ALUMINUM ALLOY					

MATERIAL:
STEEL - MINIMUM PHYSICAL REQUIREMENTS: TENSILE STRENGTH 103,000 P.S.I.; YIELD STRENGTH 85,000 P.S.I.; ELONGATION 16%; REDUCTION IN AREA 42%; BRINNELL HARDNESS 196 EXCEPT SIZES UP TO AND INCLUDING 7/16" NOMINAL DIAMETER MAY HAVE A MINIMUM YIELD STRENGTH OF 78,000 P.S.I.

DIMENSIONS IN INCHES.

EXAMPLE FOR ORDERING: NUT, SAFETY, (PLAIN), 3/8"-24NF-3, DRG. BBWX1, ORD. PART NO. 503382.

NOTE: FOR DESCRIPTION OF SAFETY NUTS SEE DRAWING BBUX1.

REVISION ⑦ 12-16-44

PIN, STRAIGHT, STEEL — BFDXI

STANDARD

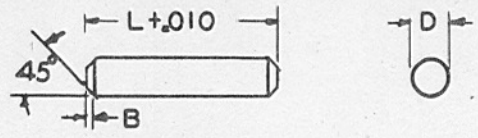

COMMERCIAL DRILL ROD

D	DIAM. OF PIN	NOM.	1/16	3/32	1/8	5/32	3/16	
		MAX.	.0630	.0942	.1255	.1567	.1880	
		MIN.	.0620	.0932	.1245	.1557	.1870	
B	CHAMFER		.010	.010	.010	1/64	1/64	

L	LENGTH	PIECEMARK					
	1/8	BFDXIAA					
	3/16	BFDXIAB					
	1/4	BFDXIAC	BFDXIBC				
	5/16	BFDXIAD	BFDXIBD				
	3/8	BFDXIAE	BFDXIBE	BFDXICE			
	7/16	BFDXIAF	BFDXIBF	BFDXICF			
	1/2	BFDXIAG	BFDXIBG	BFDXICG	BFDXIDG		
	9/16	BFDXIAH	BFDXIBH	BFDXICH	BFDXIDH		
	5/8	BFDXIAK	BFDXIBK	BFDXICK	BFDXIDK	BFDXIEK	
	11/16		BFDXIBL	BFDXICL	BFDXIDL	BFDXIEL	
	3/4		BFDXIBM	BFDXICM	BFDXIDM	BFDXIEM	
	13/16		BFDXIBN	BFDXICN	BFDXIDN	BFDXIEN	
	7/8		BFDXIBP	BFDXICP	BFDXIDP	BFDXIEP	
	15/16			BFDXICQ	BFDXIDQ	BFDXIEQ	
	1.			BFDXICR	BFDXIDR	BFDXIER	
	1-1/8			BFDXICS	BFDXIDS	BFDXIES	
	1-1/4				BFDXIDT	BFDXIET	
	1-3/8				BFDXIDU	BFDXIEU	
	1-1/2					BFDXIEW	
	1-5/8					BFDXIEX	
	1-3/4					BFDXIEZ	
	SIZE OF HOLE	DRILL 1/16 .0625	DRILL 3/32 .0937	REAMER .1240 +.0005	REAMER .1540 +.0005	REAMER .1870 +.0005	

MATERIAL FOR PIN: DRILL ROD, COMMERCIAL.

DIMENSIONS IN INCHES

NOTE: PINS SHALL BE SPEC. BY TYPE, NOM. DIAM, LENGTH & PC-MK.
EXAMPLE: PIN, STRAIGHT 3/16 X 1 - BFDXIER

NOTE: DRILLS PRESCRIBED MUST BE USED FOR SIZING HOLE AFTER DRILLING HOLE SEVERAL SIZES SMALLER. DIAMETER OF PINS AND DIAMETER OF DRILL OR REAMER TO BE USED MUST BE SELECTED TO OBTAIN .0005-.001" DRIVE FIT IN HOLE.

③ 10-31-42

ORDNANCE STANDARD (ORD. DESIGN) DATE APPROVED 1-31-34

STANDARD BOOK NO. 2

SUPERSEDES OLD TRACING BFDXI, UNDER REVISION DATE OF 10-31-42

KEY, WOODRUFF

BGAX3

ORDNANCE LIMITED STANDARD (COMMERCIAL)

APPROVED 9-20-34 DATE

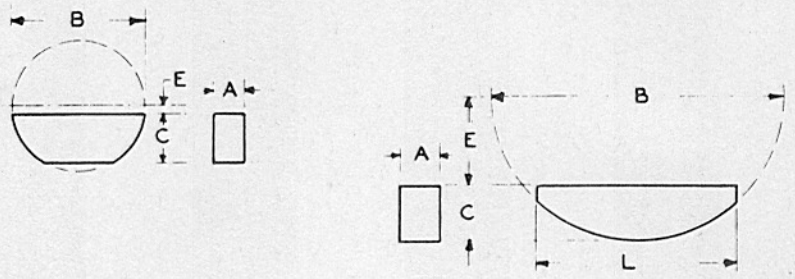

MANUFACTURERS SYMBOL	201	207	61	26	14	20
NOMINAL SIZE A x B	1/16 x 1/4	3/32 x 5/16	3/16 x 5/8	3/16x2-1/8	7/32 x 1	7/32x1-1/4
A THICKNESS MAX.	.0635	.0947	.1885	.1885	.2197	.2197
A THICKNESS MIN.	.0625	.0937	.1875	.1875	.2187	.2187
B DIAMETER	.250	.313	.625	2.125	1.000	1.250
C HEIGHT MAX.	.117	.140	.240	.521	.487	.537
C HEIGHT MIN.	.112	.135	.234	.515	.481	.531
L LENGTH MAX.						
L LENGTH MIN.						
E DISTANCE BELOW CENTER	.003	1/64	1/16	17/32	1/16	5/64
MATERIAL	ORDNANCE PART NUMBER					
CARBON STEEL ALLOY STEEL	187441	218218	218217	103463	103908	117981

MANUFACTURERS SYMBOL	91	127	28	29	TX	V
NOMINAL SIZE A x B	1/4 x 3/4	1/4 x 2-1/8	5/16 x 2-1/8	3/8 x 2-1/8	3/8 x 2-3/4	1/2 x 2-3/4
A THICKNESS MAX.	.251	.251	.3135	.376	.376	.501
A THICKNESS MIN.	.250	.250	.3125	.375	.375	.500
B DIAMETER	.750	2.125	2.125	2.125	2.750	2.750
C HEIGHT MAX.	.302	.396	.521	.521	.584	.740
C HEIGHT MIN.	.296	.390	.515	.515	.578	.734
L LENGTH MAX.		1.380	1.723	1.723	2.005	2.317
L LENGTH MIN.		1.370	1.713	1.713	1.995	2.307
E DISTANCE BELOW CENTER	1/16	21/32	17/32	17/32	.786	.5/8
MATERIAL	ORDNANCE PART NUMBER					
CARBON STEEL ALLOY STEEL	127559 218211	117987 118000	117988 118001	112654 118002	187362	218215 218216

MATERIAL: COMMERCIAL (AS ORDERED) DIMENSIONS IN INCHES
CARBON STEEL - S.A.E. 1035
ALLOY STEEL - S.A.E. 2330 OR EQUAL (MIN. ROCKWELL HARDNESS 40 C SCALE)
ALLOY STEEL KEYS ARE IDENTIFIED BY DEPRESSIONS ON THE SIDES.

EXAMPLE FOR ORDERING: KEY, WOODRUFF, 1/4 x 3/4 (No. 91) CARBON STEEL, DRG. BGAX3, PART No. 127559.

SUPERSEDES OLD TRACING BGAX3 UNDER REVISION DATE OF 5-26-44

REVISION (3) 5-26-44

HEAT TREATMENT AND FINAL FINISH

PHYSICAL PROPERTIES	
Y. P.	
T. S.	
EL. 2	
RED	
BR.	
ROCK	
SCL.	

AUGUST 22, 1940

REVISIONS

5	3-16-42
6	7-10-42
7	3-26-43
8	5-20-43
9	4-3-44

DRG. PERTAINS TO

D7052	MT, TRIPOD, M.G
	CAL. .30, M 2

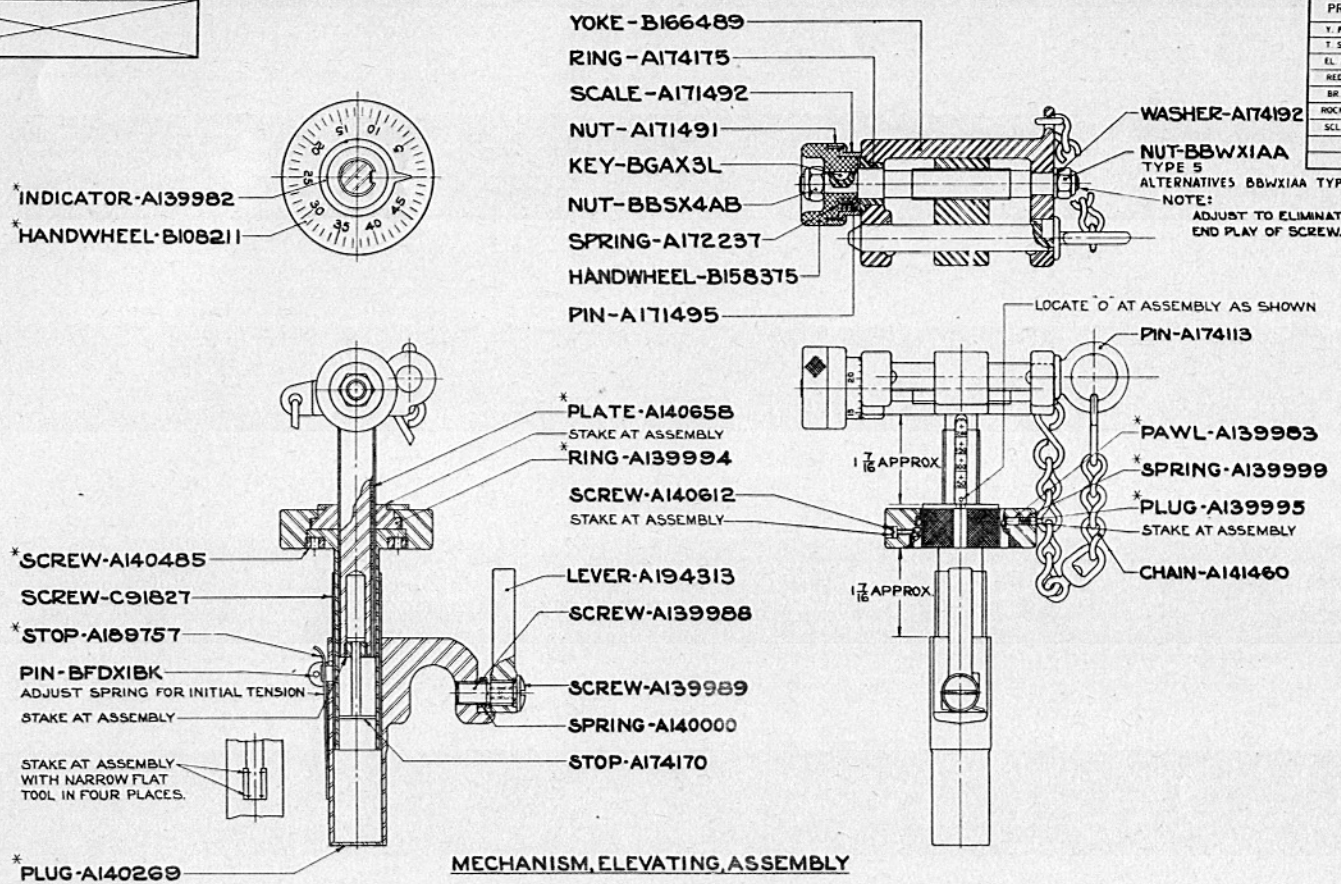

MECHANISM, ELEVATING, ASSEMBLY

*WILL NOT BE ISSUED FOR FIELD MAINTENANCE EXCEPT AS COMPONENTS OF AUTHORIZED ASSEMBLIES.

SUPERSEDES OLD TRACING C74620
UNDER REV. DATE OF MARCH 16, 1942

0 1 2 3 4 5 6 7 8 9 10 11 INCHES

C74620

DRAFTSMAN	TRACER	L.B.G. DRAFTSMAN
RKB	RKB	AHR
CHECKER		CHIEF DRAFTSMAN
L.M.D.		

SUBMITTED:

APPROVED BY ORDER OF THE CHIEF OF ORDNANCE

ORDNANCE DEPT., U. S. A.

MADE AT ROCK ISLAND ARSENAL

HEAT TREATMENT AND FINAL FINISH

PHYSICAL PROPERTIES	
Y. P.	
T. S.	
EL. 2	
RED.	
BR.	
ROCK.	
SCL.	

JULY 11, 1942
REVISIONS

DRG. PERTAINS TO

C74620	MECH., ELEV.
	ASSEMBLY
D7052	MT. TRIPOD, MG
	CAL. .30 M2

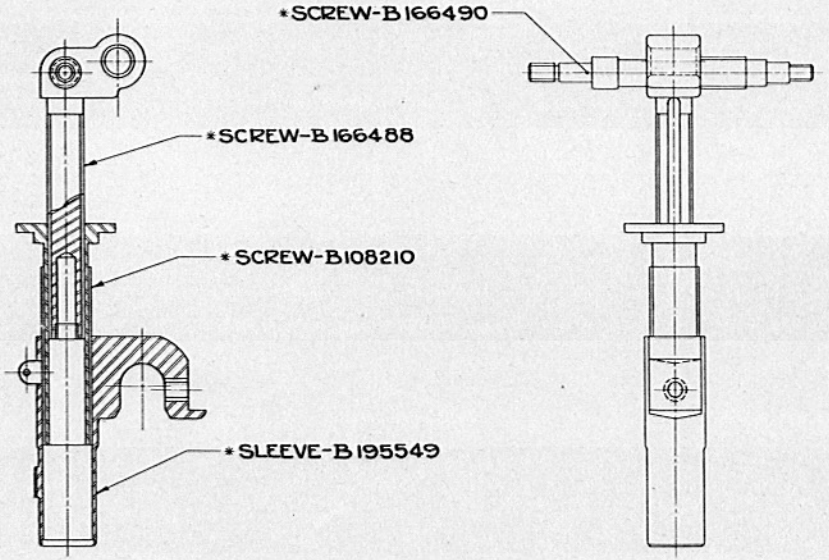

SCREW, ELEVATING, ASSEMBLY

* WILL NOT BE ISSUED FOR FIELD MAINTANANCE EXCEPT AS COMPONENTS OF AUTHORIZED ASSEMBLIES.

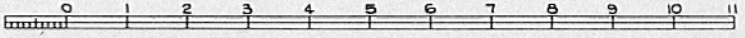

C91827

SUBMITTED:-

APPROVED BY ORDER OF THE CHIEF OF ORDNANCE

ORDNANCE DEPT. U. S. A.

MADE AT ROCK ISLAND ARSENAL